Higher Quality
Better Service!

EXAM SELL
Certified IT practice exam authority
Accurate study guides, High passing rate!
Exam Sell provides update free of charge in one year!

http://www.examsell.com

Exam : **3V0-622**

Title : VMware Certified Advanced Professional 6 – Data Center Virtualization Design Exam

Version : DEMO

1.DRAG DROP

You have been tasked with creating a vSphere 6.x data center design for an organization. The customer has decided to virtualize their database application and has provided specific design requirements. You must determine how these requirements map to the design characteristic(s).

Match Database Requirements with Design Characteristics by dragging the red button (R1-R5) over the text of the appropriate Design Characteristic.

NOTE: Database Requirements can be mapped to more than one Design Characteristic.

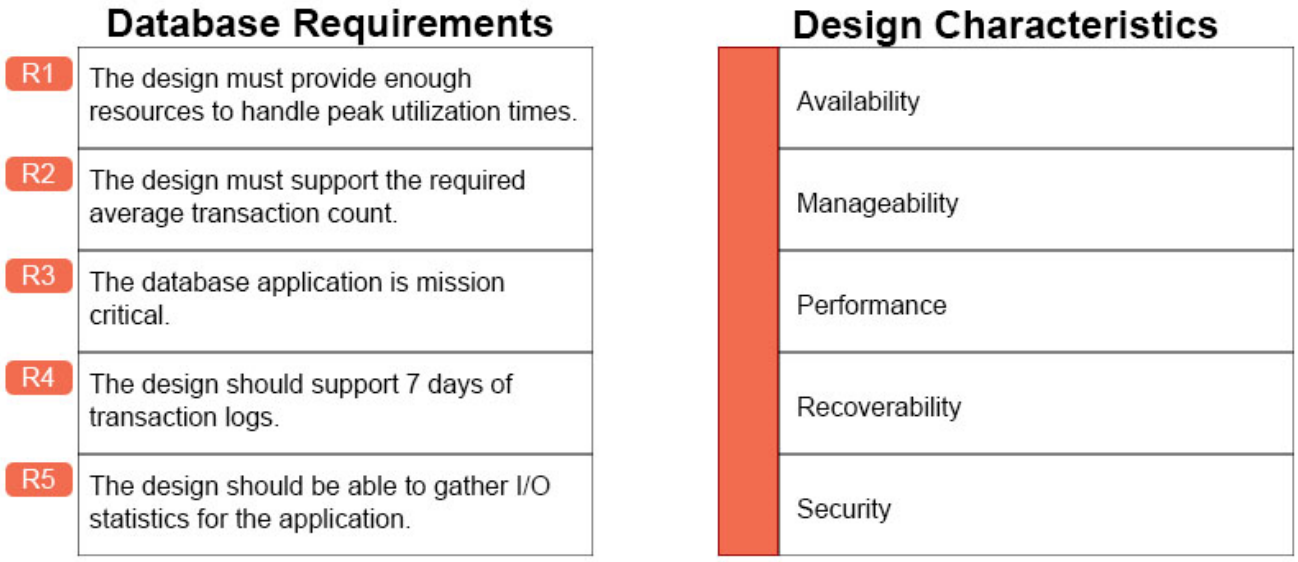

Answer:

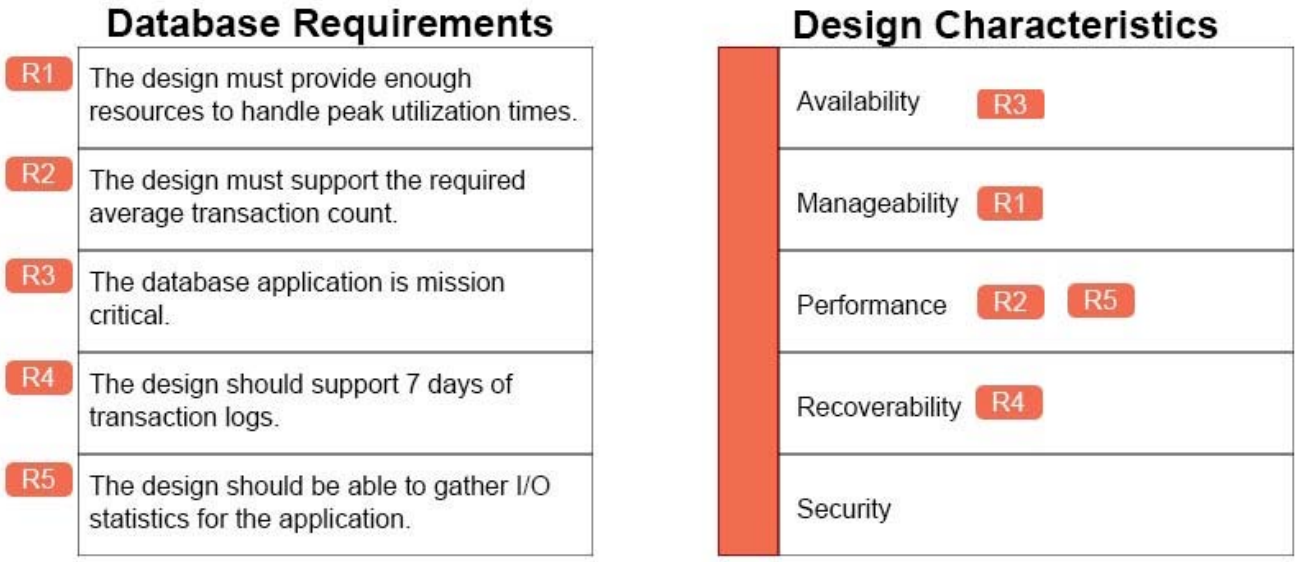

2.Customer Requirements:

You have been tasked with creating a vSphere 6.x data center design for an organization. The organization has produced two 24 port FC switches, and Asymmetrical Active/Active storage array (2

storage Processors with 4 ports each) and 22 ESXi Hosts with 2 dual port HBAs in each. Due to budgetary constraints, the organization cannot purchase anymore equipment. They have provided the following requirements:
- The existing Fibre Channel (FC) Asymmetrical Active/Active Array and FC switches must be used.
- No single point of failure to any datastore.
- Configuration must provide failover and load balancing.
- The customer requires a solution that will accommodate virtual machines with three different I/O load requirements:
- Static web virtual machines
- Critical application virtual machines.
- Object storage for their database virtual machines.

Design Requirements:
Create a logical design that be applied to each of the ESXi Hosts. The design should meet, but not exceed the customer's requirements and should include:
- All required hardware
- All required resources

Place the required datastore(s) in the storage array(s). Connect the storage processor(s) to the storage array(s). Connect the switch(es) to the storage processor(s) and HBA(s). Connect the ESXi host to the HBA(s) and Path Selection Policies.

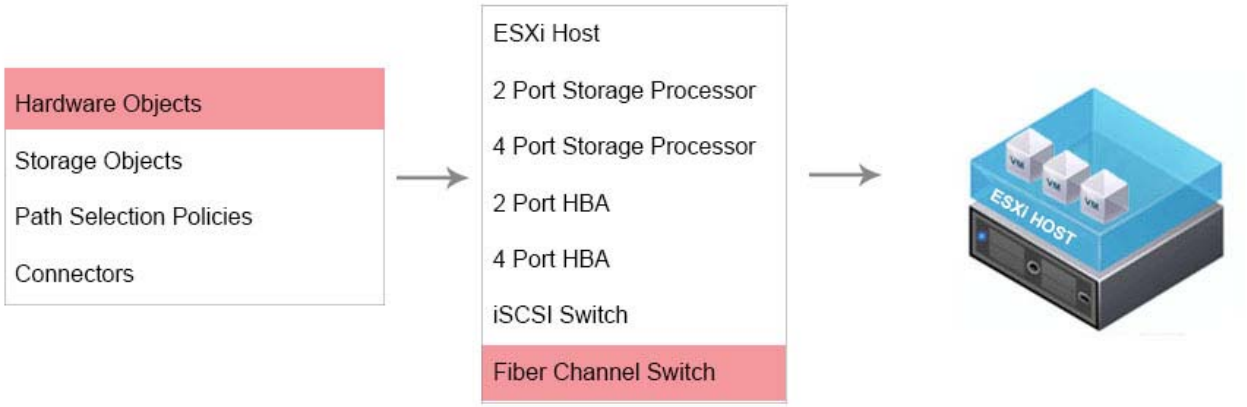

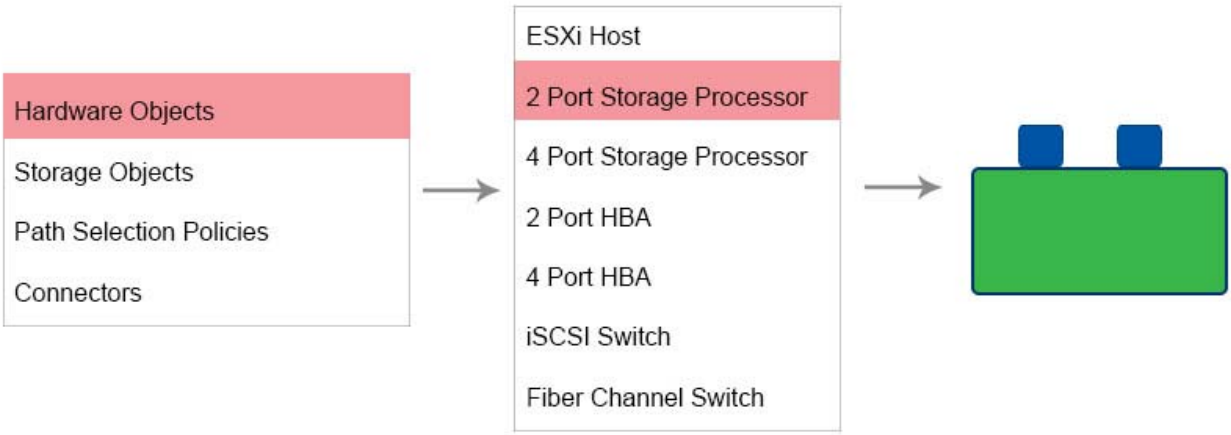

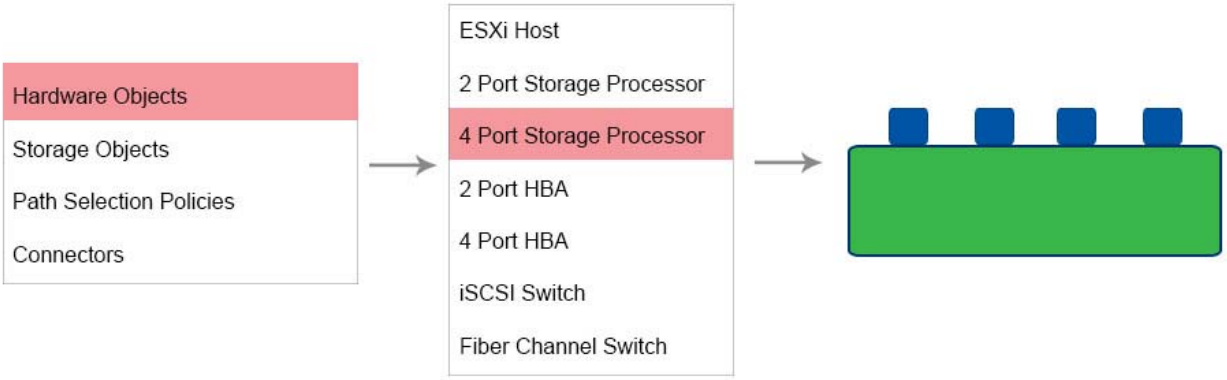
Hardware Objects
Storage Objects
Path Selection Policies
Connectors
ESXi Host
2 Port Storage Processor
4 Port Storage Processor
2 Port HBA
4 Port HBA
iSCSI Switch
Fiber Channel Switch

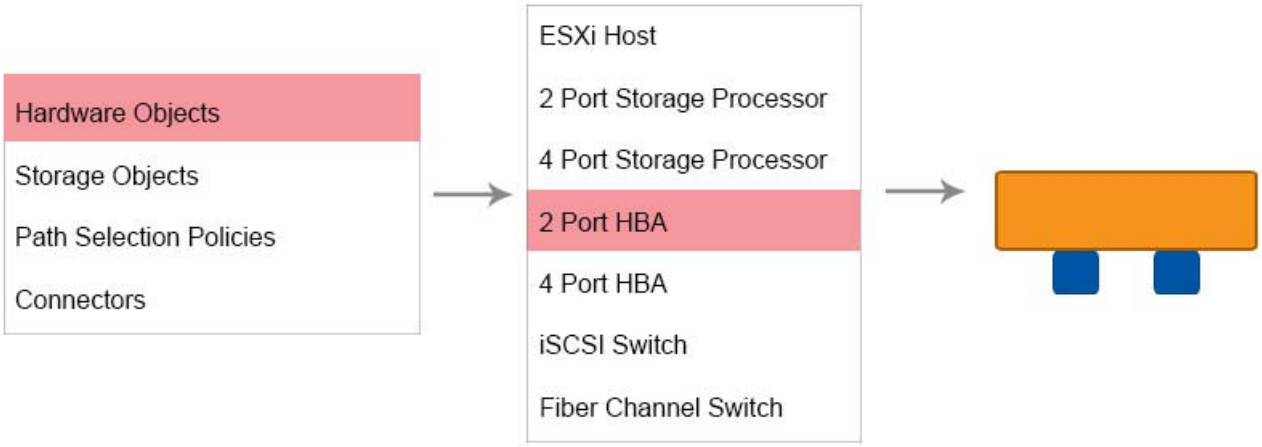
Hardware Objects
Storage Objects
Path Selection Policies
Connectors
ESXi Host
2 Port Storage Processor
4 Port Storage Processor
2 Port HBA
4 Port HBA
iSCSI Switch
Fiber Channel Switch

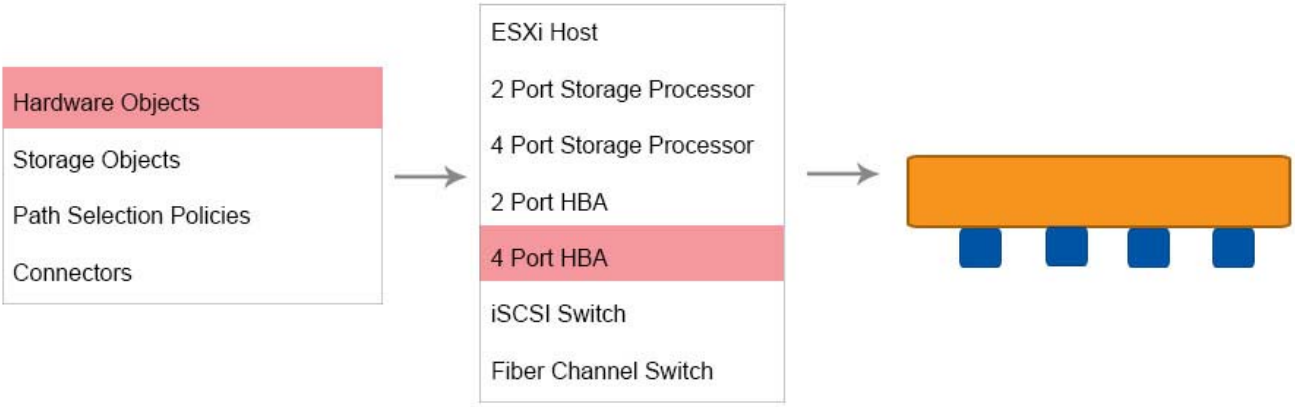
Hardware Objects
Storage Objects
Path Selection Policies
Connectors
ESXi Host
2 Port Storage Processor
4 Port Storage Processor
2 Port HBA
4 Port HBA
iSCSI Switch
Fiber Channel Switch

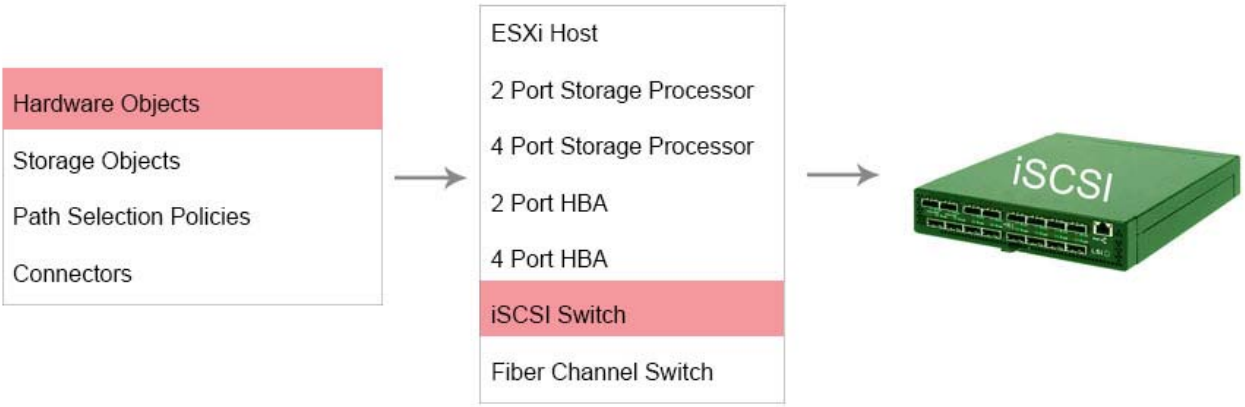
Hardware Objects
Storage Objects
Path Selection Policies
Connectors
ESXi Host
2 Port Storage Processor
4 Port Storage Processor
2 Port HBA
4 Port HBA
iSCSI Switch
Fiber Channel Switch
iSCSI

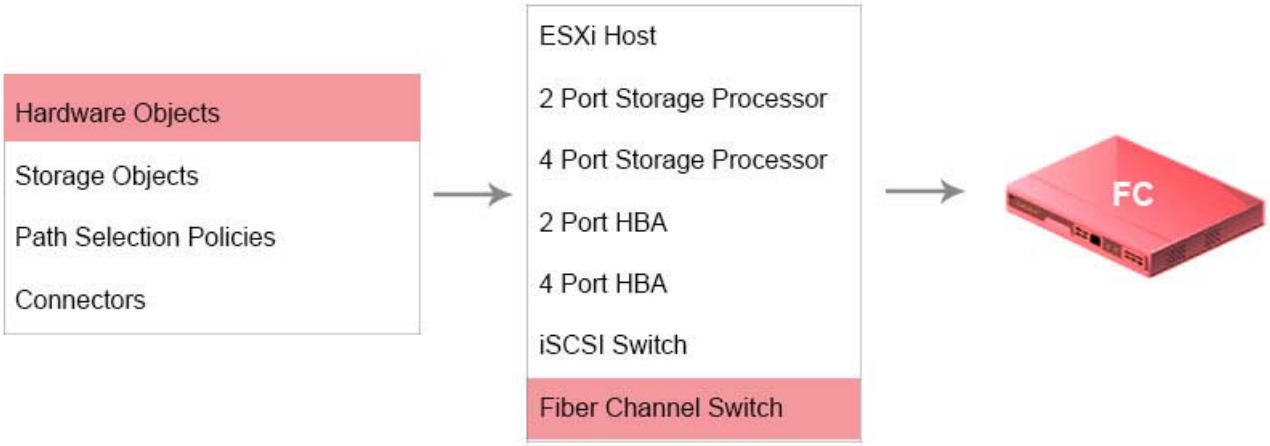
Hardware Objects
Storage Objects
Path Selection Policies
Connectors
ESXi Host
2 Port Storage Processor
4 Port Storage Processor
2 Port HBA
4 Port HBA
iSCSI Switch
Fiber Channel Switch
FC

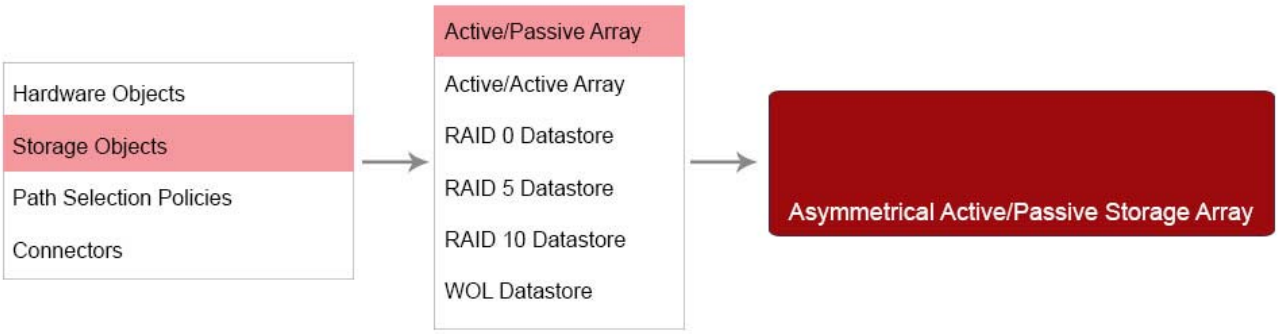
Hardware Objects
Storage Objects
Path Selection Policies
Connectors
Active/Passive Array
Active/Active Array
RAID 0 Datastore
RAID 5 Datastore
RAID 10 Datastore
WOL Datastore
Asymmetrical Active/Passive Storage Array

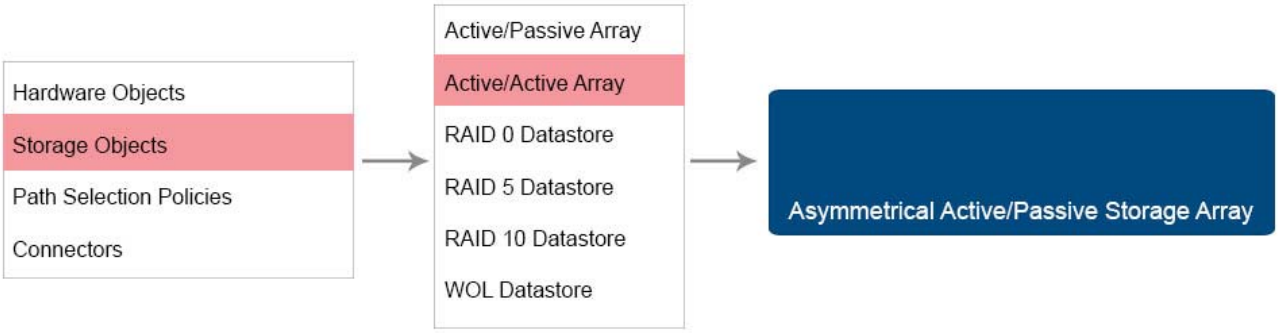
Hardware Objects
Storage Objects
Path Selection Policies
Connectors
Active/Passive Array
Active/Active Array
RAID 0 Datastore
RAID 5 Datastore
RAID 10 Datastore
WOL Datastore
Asymmetrical Active/Passive Storage Array

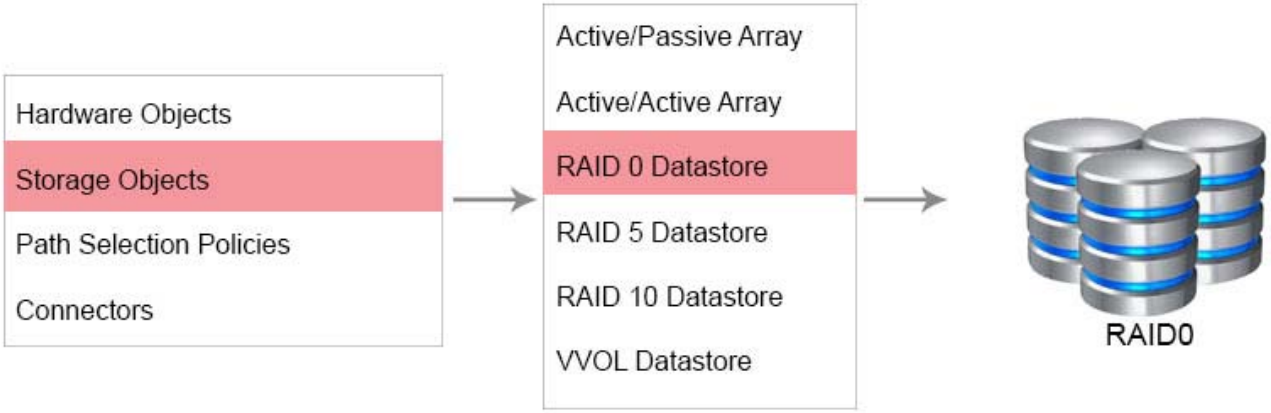
Hardware Objects
Storage Objects
Path Selection Policies
Connectors
Active/Passive Array
Active/Active Array
RAID 0 Datastore
RAID 5 Datastore
RAID 10 Datastore
VVOL Datastore
RAID0

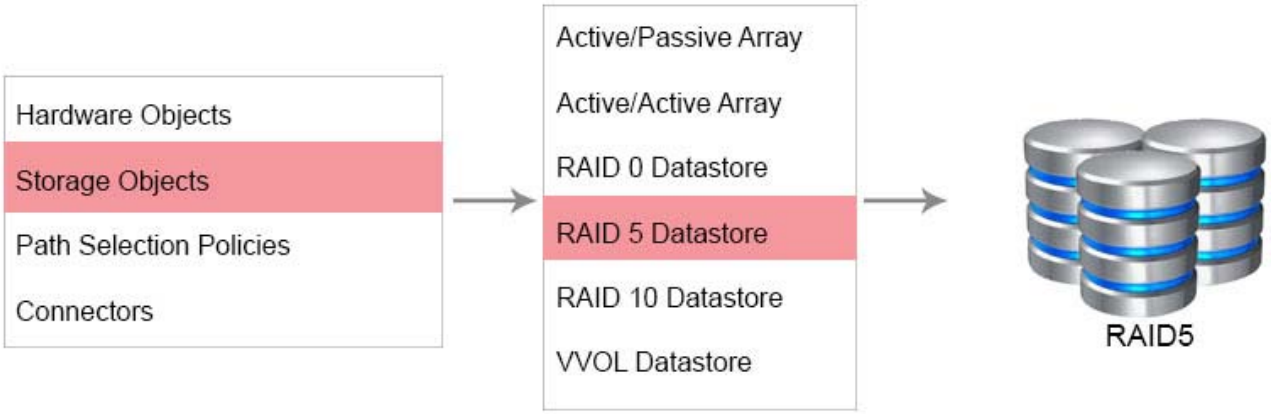
Hardware Objects
Storage Objects
Path Selection Policies
Connectors
Active/Passive Array
Active/Active Array
RAID 0 Datastore
RAID 5 Datastore
RAID 10 Datastore
VVOL Datastore
RAID5

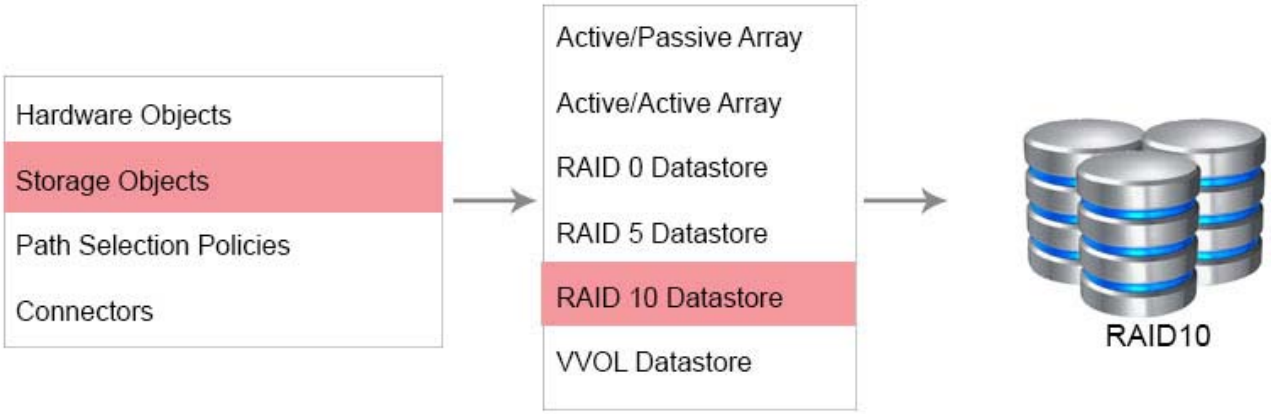
Hardware Objects
Storage Objects
Path Selection Policies
Connectors
Active/Passive Array
Active/Active Array
RAID 0 Datastore
RAID 5 Datastore
RAID 10 Datastore
VVOL Datastore
RAID10

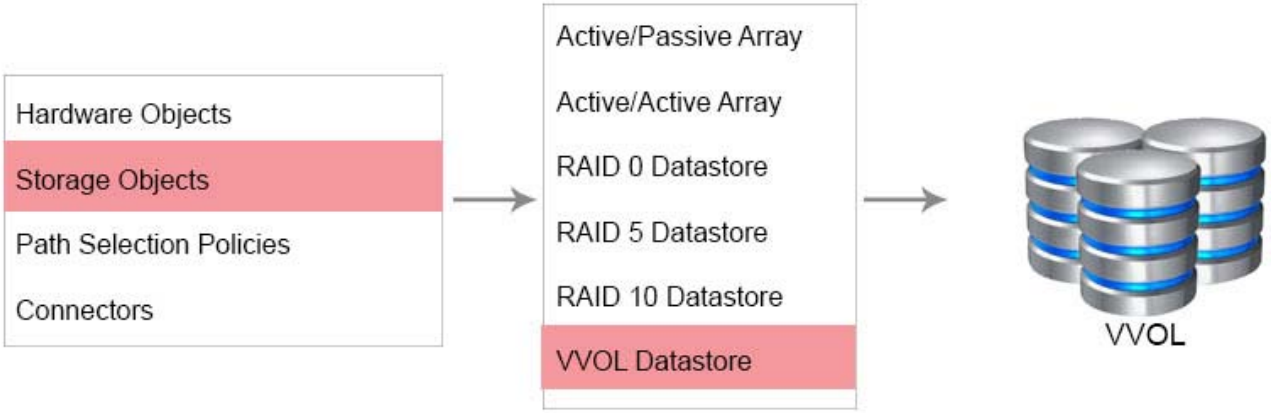
Hardware Objects
Storage Objects
Path Selection Policies
Connectors
Active/Passive Array
Active/Active Array
RAID 0 Datastore
RAID 5 Datastore
RAID 10 Datastore
VVOL Datastore
VVOL

Hardware Objects
Storage Objects
Path Selection Policies
Connectors
Fixed PSP
Most Recently Used PSP
Round Robin PSP
FIXED

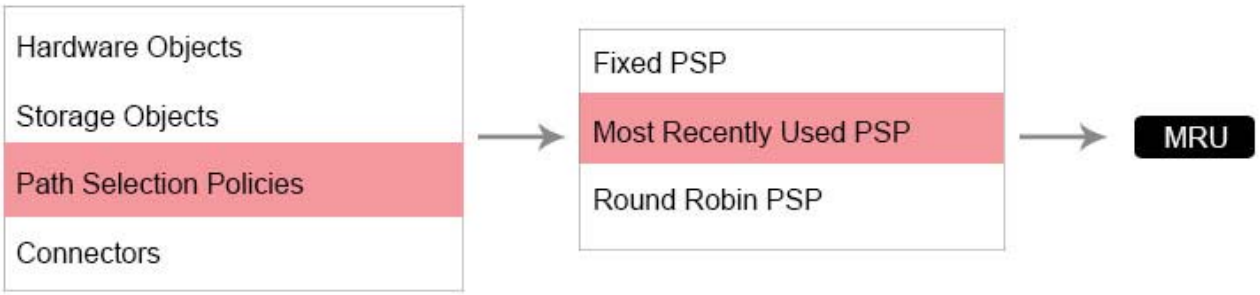
Hardware Objects
Storage Objects
Path Selection Policies
Connectors
Fixed PSP
Most Recently Used PSP
Round Robin PSP
MRU

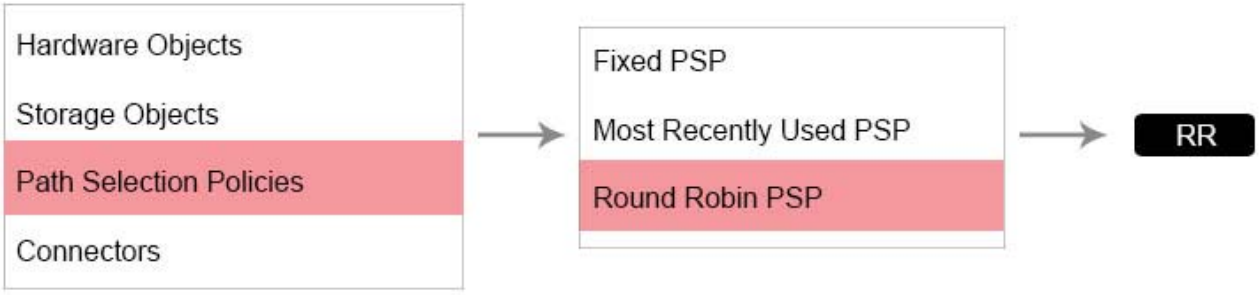
Hardware Objects
Storage Objects
Path Selection Policies
Connectors
Fixed PSP
Most Recently Used PSP
Round Robin PSP
RR

Answer:

See the solution below

Check below for answer solution

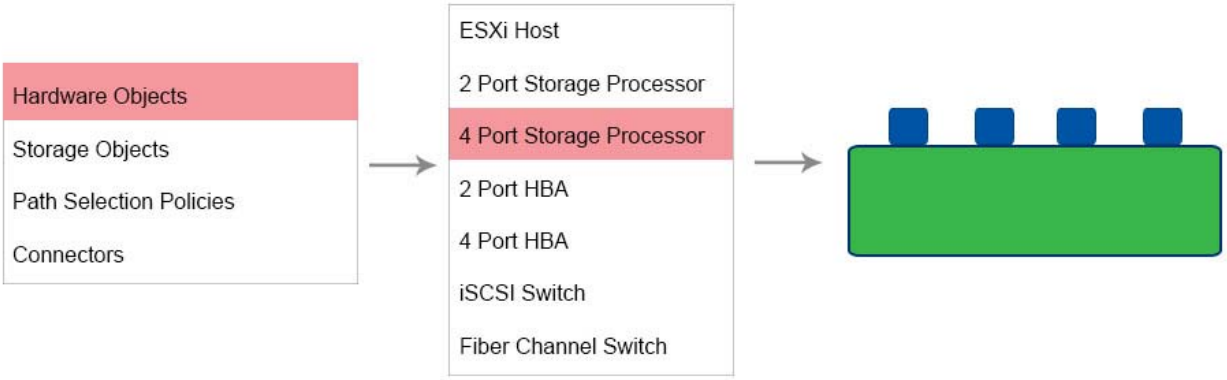

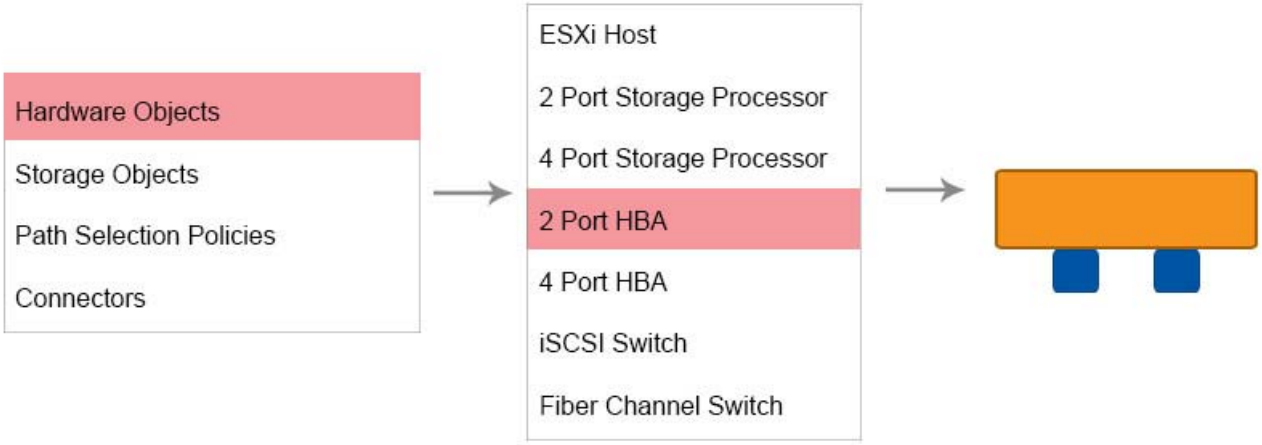

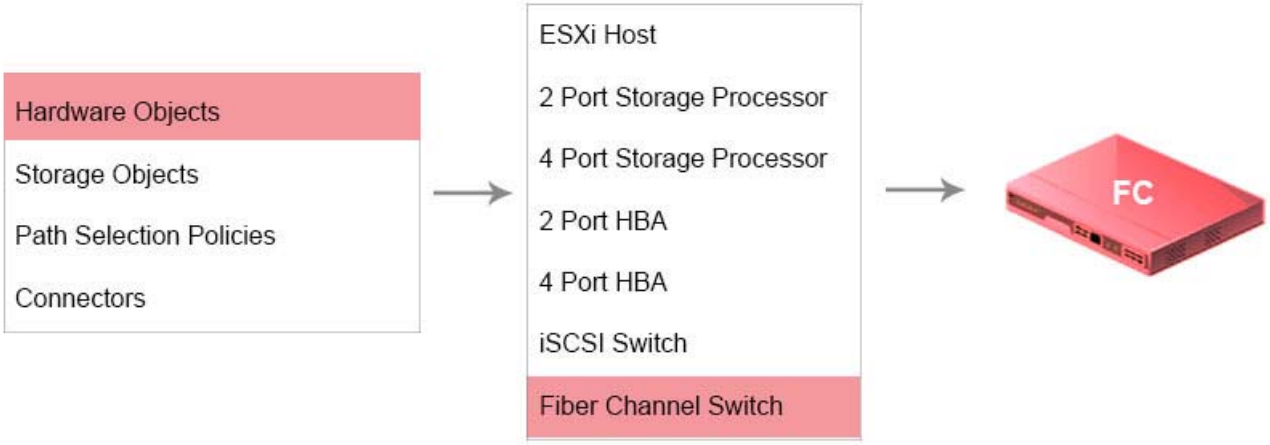
Hardware Objects
Storage Objects
Path Selection Policies
Connectors
ESXi Host
2 Port Storage Processor
4 Port Storage Processor
2 Port HBA
4 Port HBA
iSCSI Switch
Fiber Channel Switch
FC

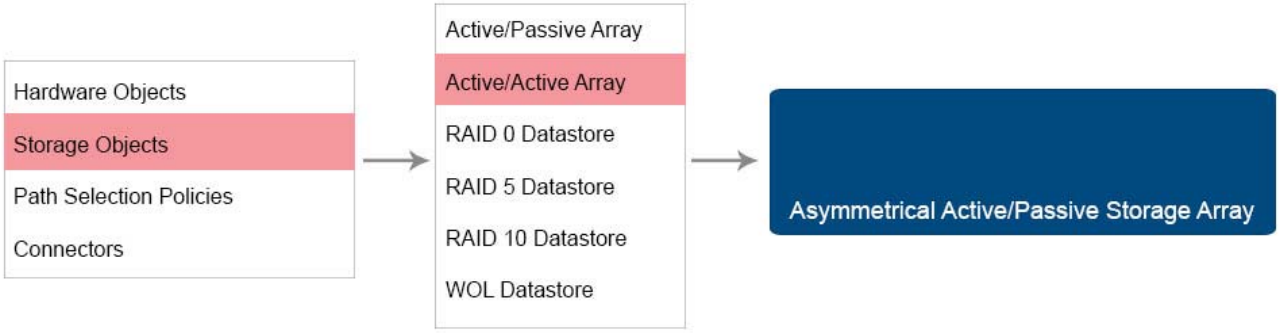
Hardware Objects
Storage Objects
Path Selection Policies
Connectors
Active/Passive Array
Active/Active Array
RAID 0 Datastore
RAID 5 Datastore
RAID 10 Datastore
WOL Datastore
Asymmetrical Active/Passive Storage Array

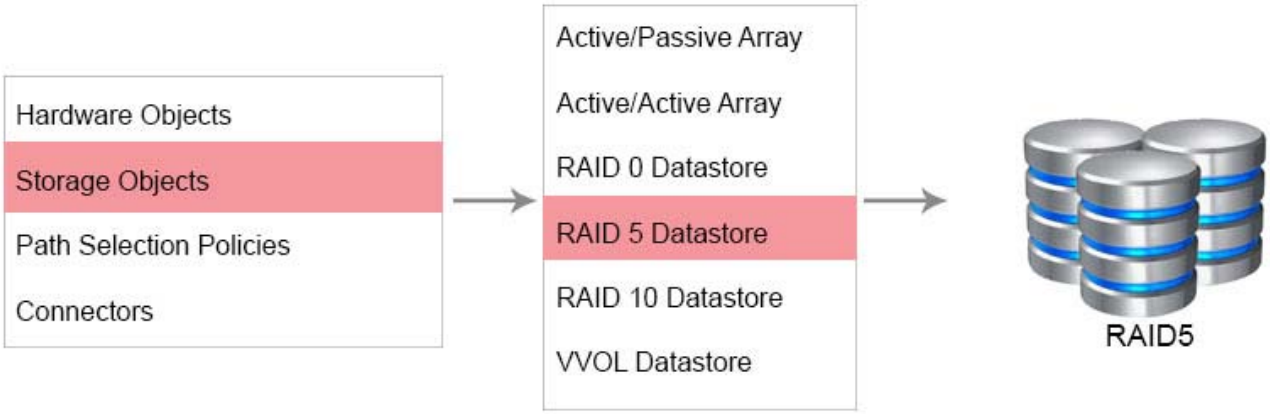
Hardware Objects
Storage Objects
Path Selection Policies
Connectors
Active/Passive Array
Active/Active Array
RAID 0 Datastore
RAID 5 Datastore
RAID 10 Datastore
VVOL Datastore
RAID5

Hardware Objects
Storage Objects
Path Selection Policies
Connectors
Fixed PSP
Most Recently Used PSP
Round Robin PSP
FIXED

3.Customer Requirements:
You have been tasked with creating a vSphere 6.x data center design for an organization. The organization is looking to virtualize their physical email application. The company has provided a list of requirements that must be included in the design:
- E-mail database is replicated between two servers at a logical level, with no shared disk configurations.
- E-mail databases meet corporate criteria for LUN provisioning, and must reside directly on storage array.
- Operating system disks do not meet corporate requirements for LUN provisioning, and per policy should not share the same VMFS storage location for redundancy reasons.
- Internal users currently point to three Client Access Servers for load balancing.
- External users currently point to three Web Client Access Servers for load balancing.
- Customer requires discrete hardware to provide security between internal servers and externally available servers, as well as between externally available servers, and client connections from offsite.
Design Requirements:
Create a solution that shows the service dependencies required for virtualizing the email application, including:
- All required storage for Mail DB VM(s) only
- All required network and security connection(s)
- All required virtual machine(s)
- All required user(s)
Place all items in required container(s). Connect VMFS datastore(s) to required virtual machine(s). Place disk(s) over the required storage type(s). Connect firewall(s) to container(s).

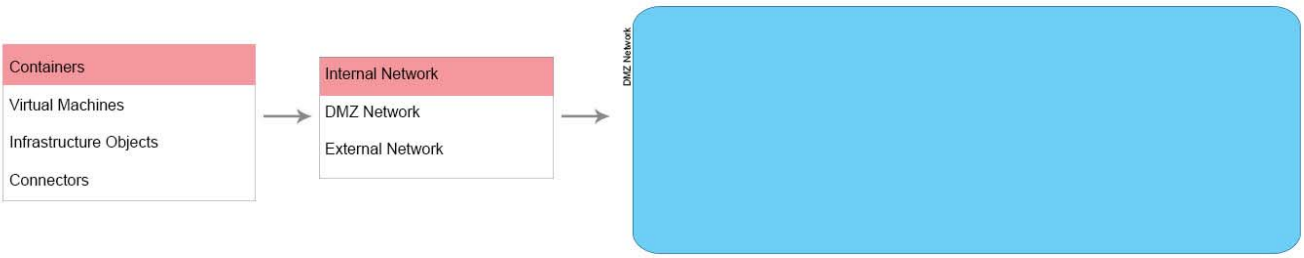

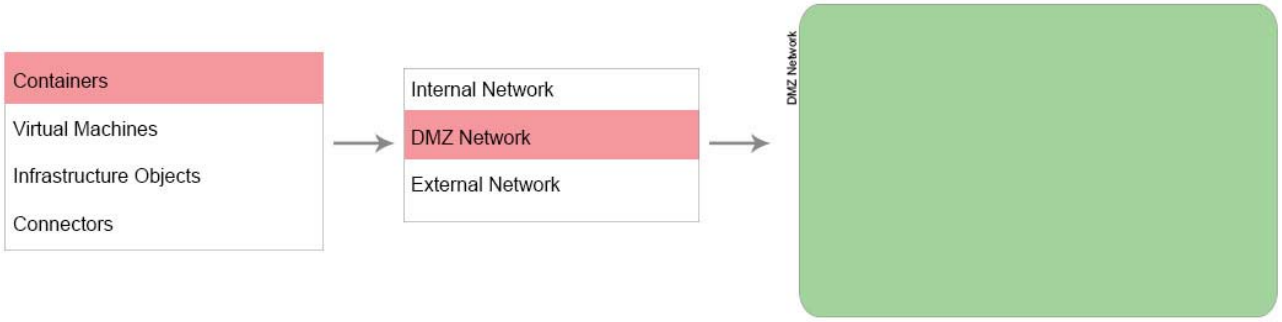
Containers
Virtual Machines
Infrastructure Objects
Connectors
Internal Network
DMZ Network
External Network
DMZ Network

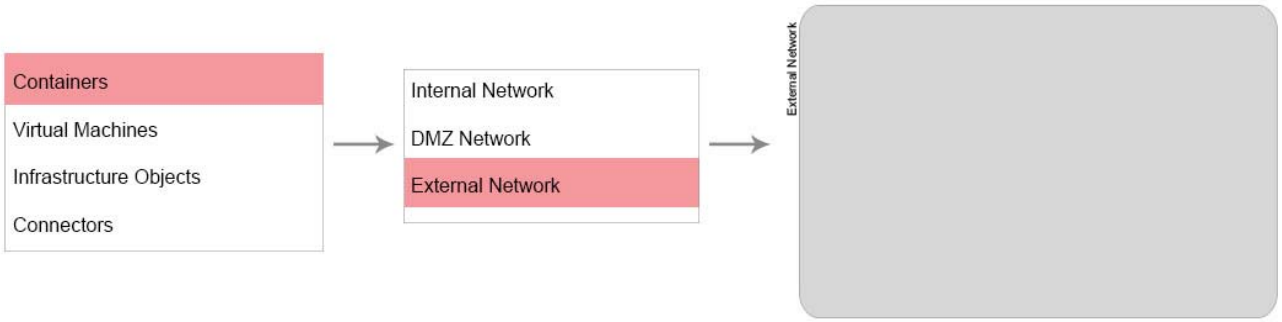
Containers
Virtual Machines
Infrastructure Objects
Connectors
Internal Network
DMZ Network
External Network
External Network

Containers
Virtual Machines
Infrastructure Objects
Connectors
Client Access
Mail Database
Client Web Access
Client Access VM

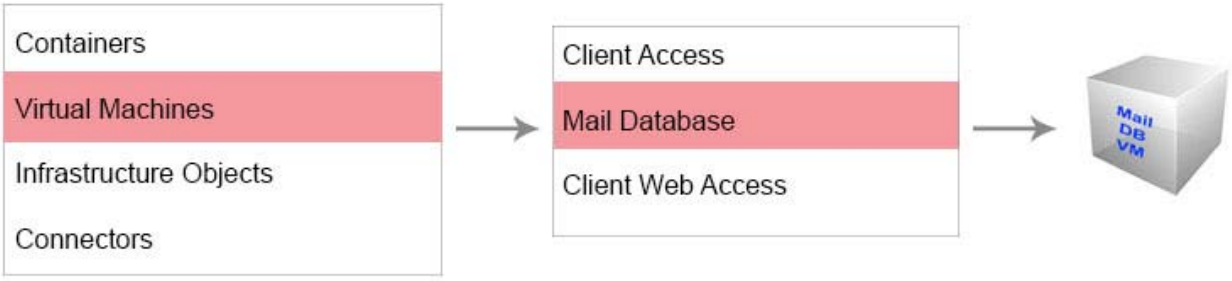
Containers
Virtual Machines
Infrastructure Objects
Connectors
Client Access
Mail Database
Client Web Access
Mail DB VM

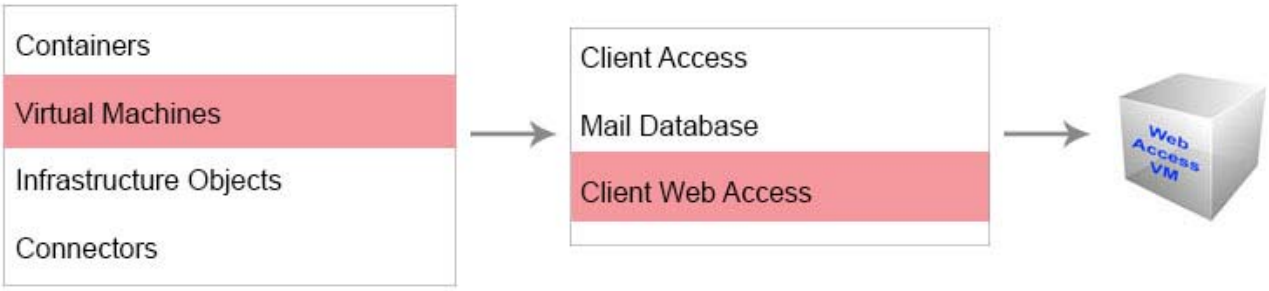
Containers
Virtual Machines
Infrastructure Objects
Connectors
Client Access
Mail Database
Client Web Access
Web Access VM

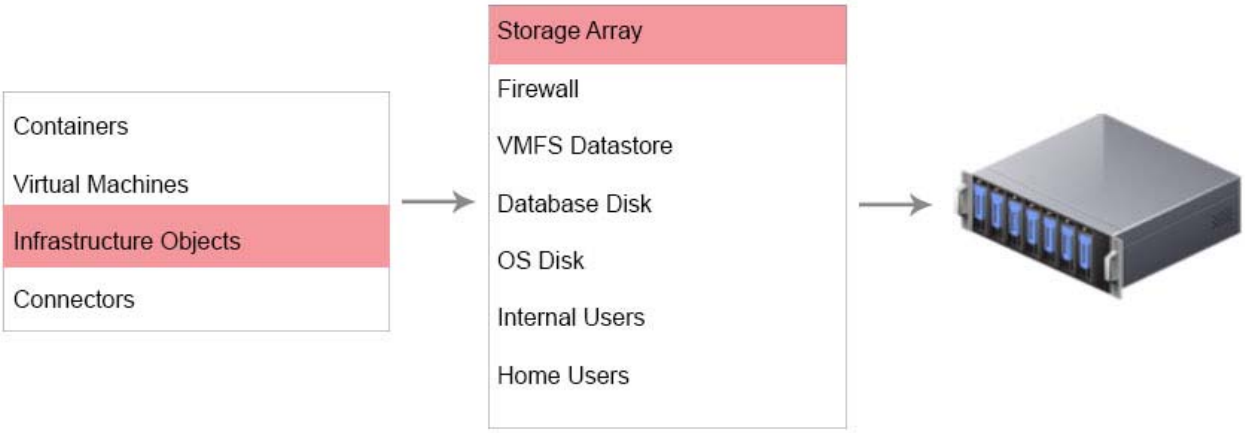
Containers
Virtual Machines
Infrastructure Objects
Connectors
Storage Array
Firewall
VMFS Datastore
Database Disk
OS Disk
Internal Users
Home Users

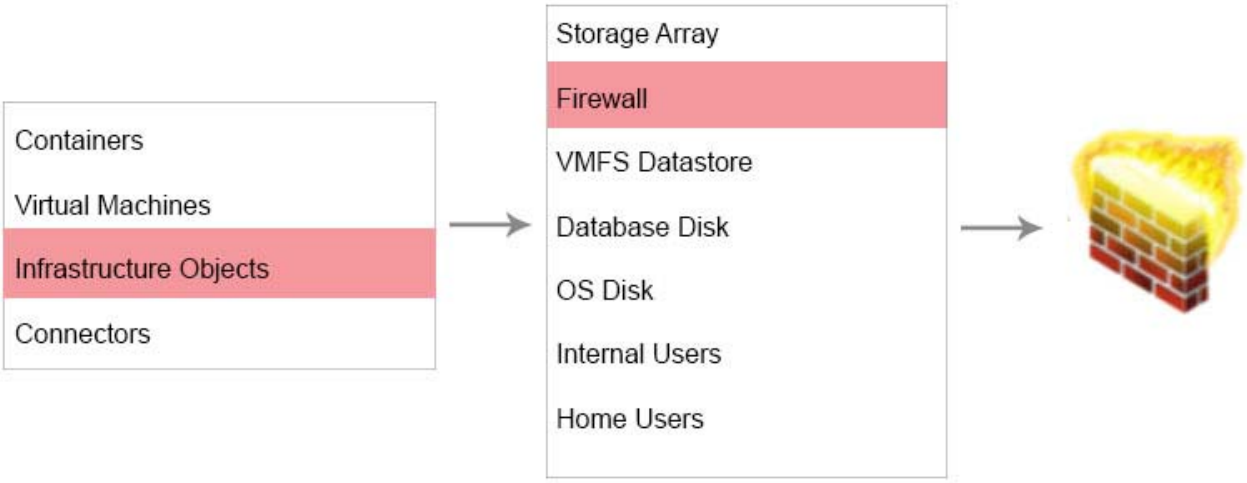
Containers
Virtual Machines
Infrastructure Objects
Connectors
Storage Array
Firewall
VMFS Datastore
Database Disk
OS Disk
Internal Users
Home Users

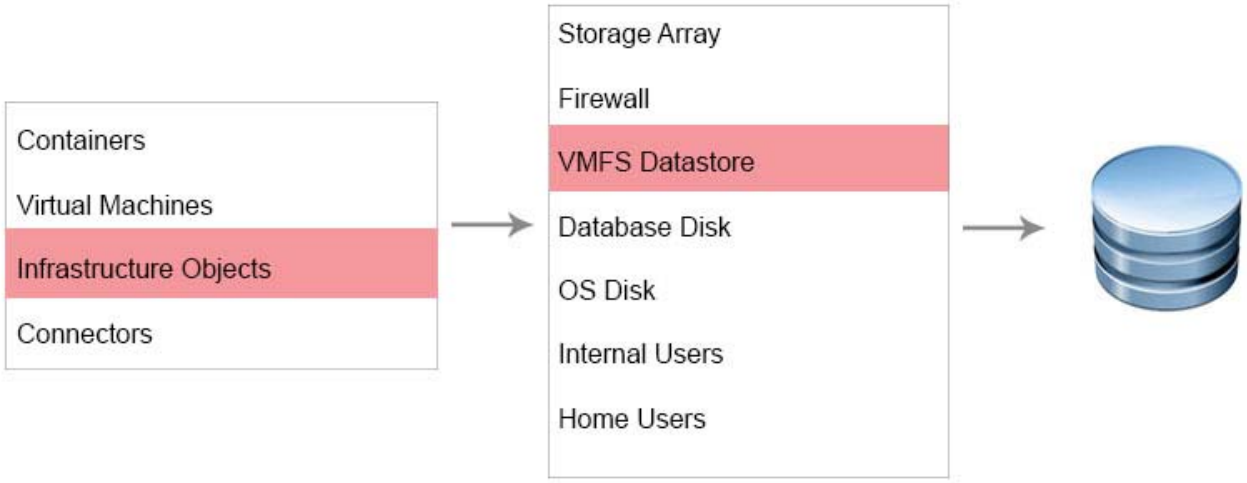
Containers
Virtual Machines
Infrastructure Objects
Connectors
Storage Array
Firewall
VMFS Datastore
Database Disk
OS Disk
Internal Users
Home Users

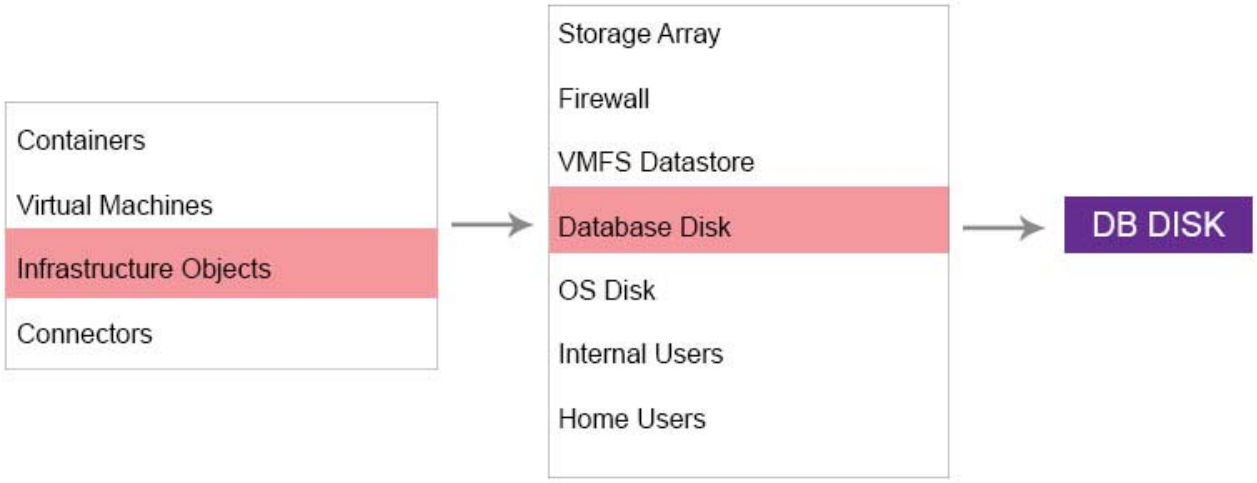
Containers
Virtual Machines
Infrastructure Objects
Connectors
Storage Array
Firewall
VMFS Datastore
Database Disk
OS Disk
Internal Users
Home Users
DB DISK

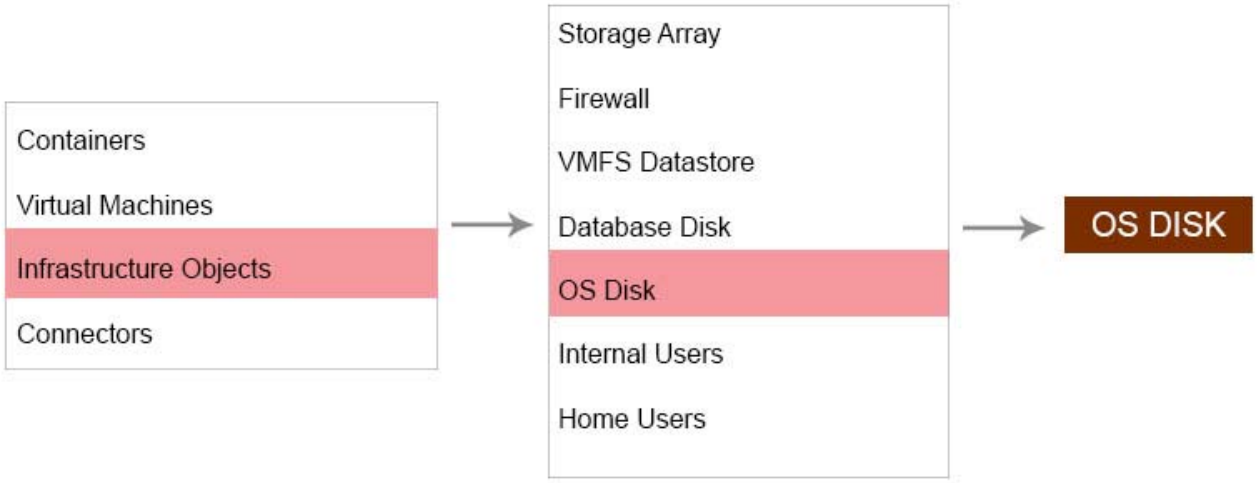
Containers
Virtual Machines
Infrastructure Objects
Connectors
Storage Array
Firewall
VMFS Datastore
Database Disk
OS Disk
Internal Users
Home Users
OS DISK

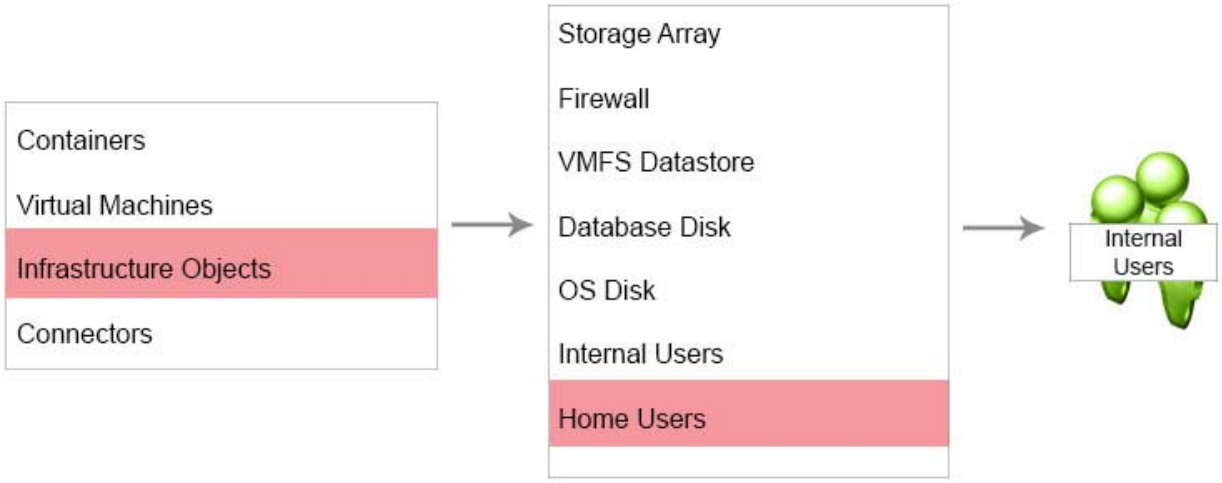
Containers
Virtual Machines
Infrastructure Objects
Connectors
Storage Array
Firewall
VMFS Datastore
Database Disk
OS Disk
Internal Users
Home Users
Internal Users

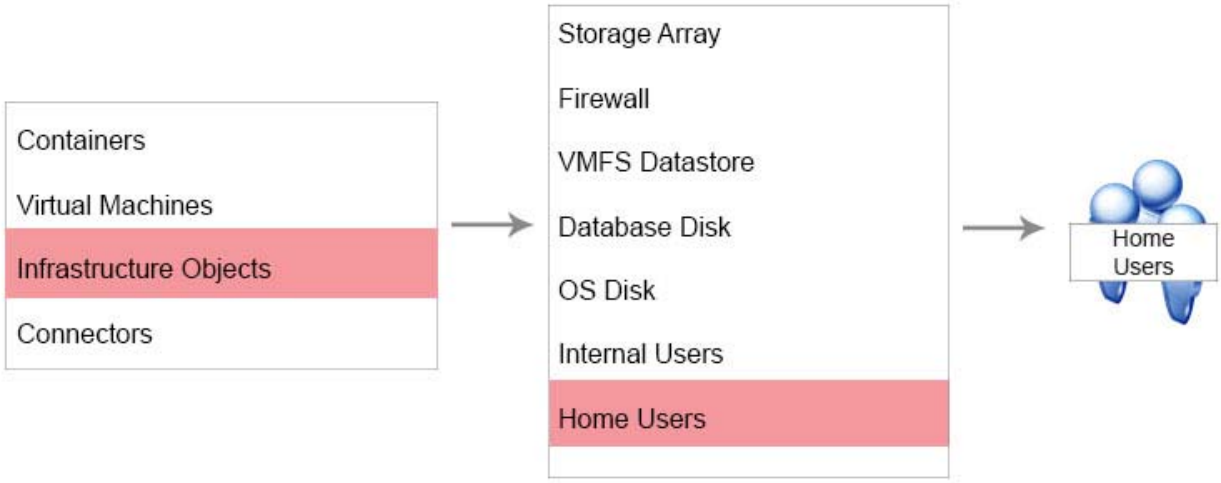

Answer:

See the solution below

Check below for answer solution

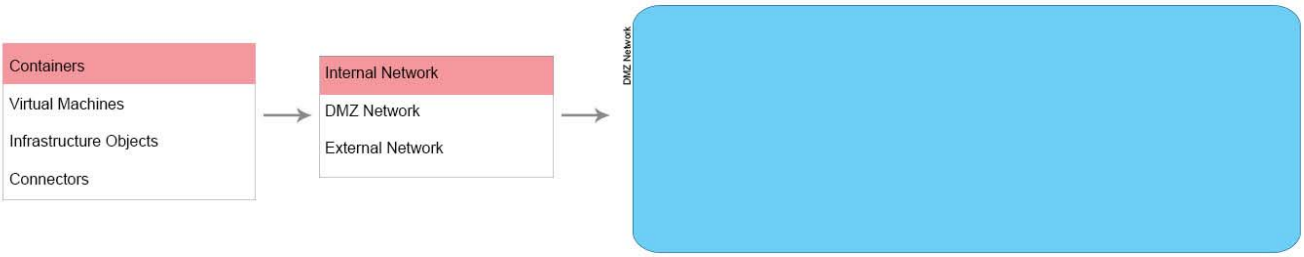

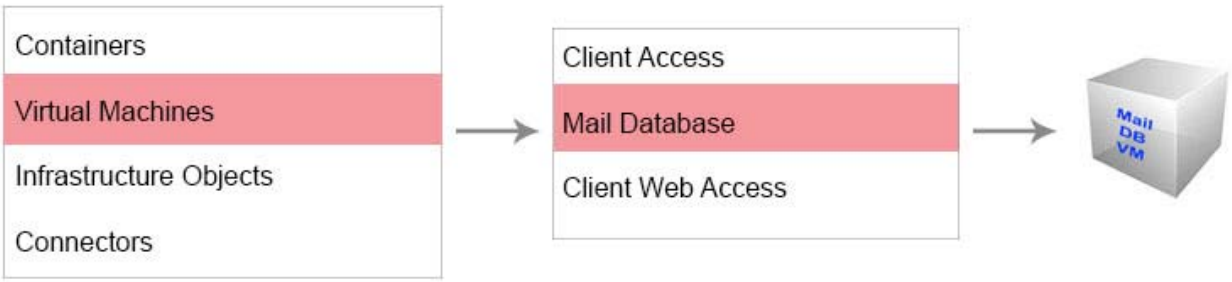
Containers
Virtual Machines
Infrastructure Objects
Connectors
Client Access
Mail Database
Client Web Access
Mail DB VM

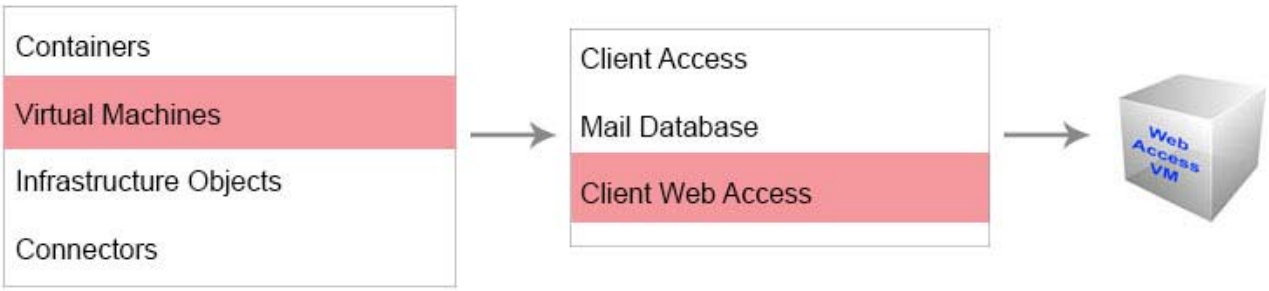
Containers
Virtual Machines
Infrastructure Objects
Connectors
Client Access
Mail Database
Client Web Access
Web Access VM

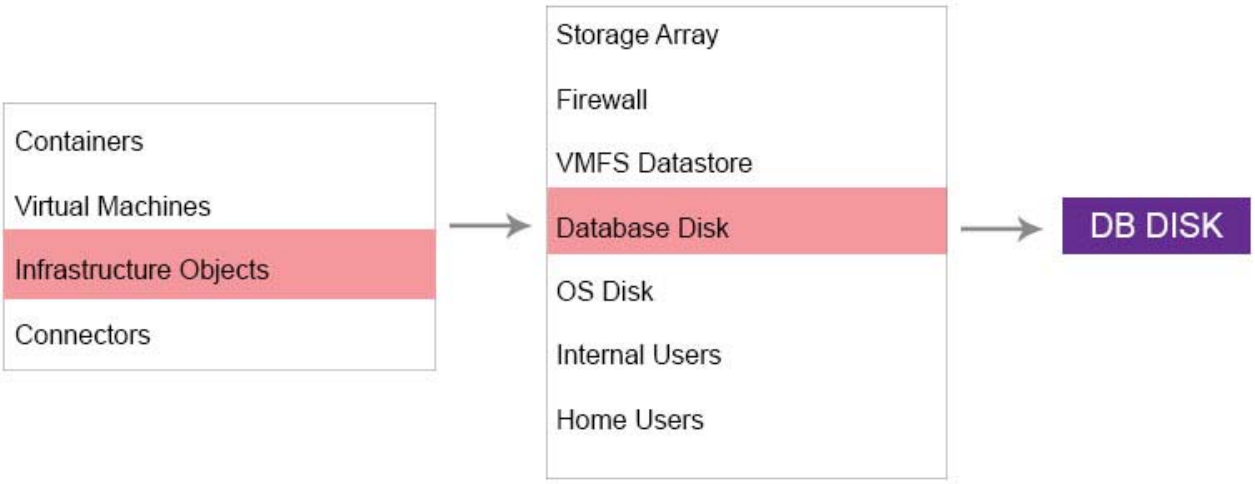
Containers
Virtual Machines
Infrastructure Objects
Connectors
Storage Array
Firewall
VMFS Datastore
Database Disk
OS Disk
Internal Users
Home Users
DB DISK

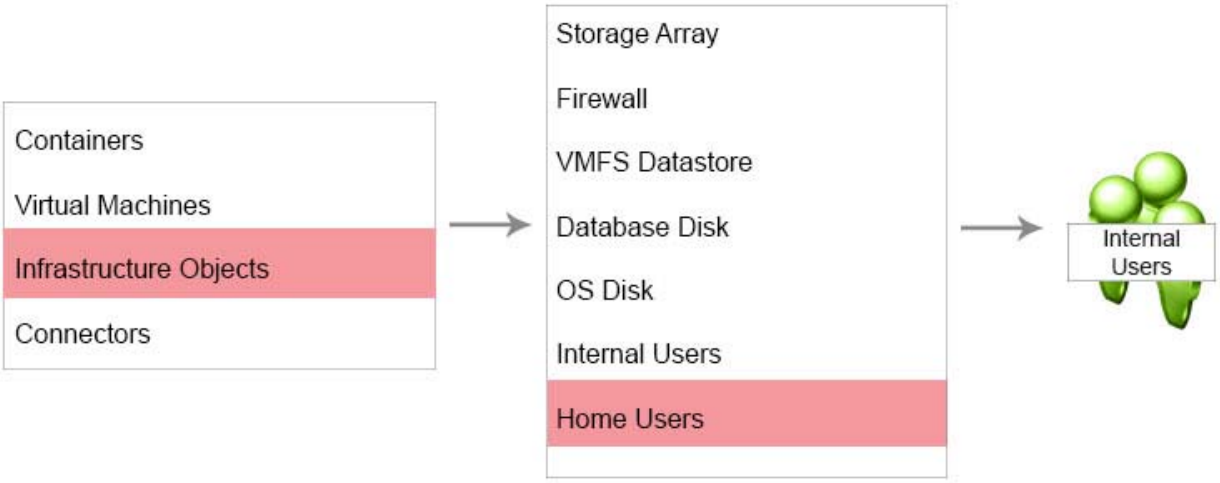
Containers
Virtual Machines
Infrastructure Objects
Connectors
Storage Array
Firewall
VMFS Datastore
Database Disk
OS Disk
Internal Users
Home Users
Internal Users

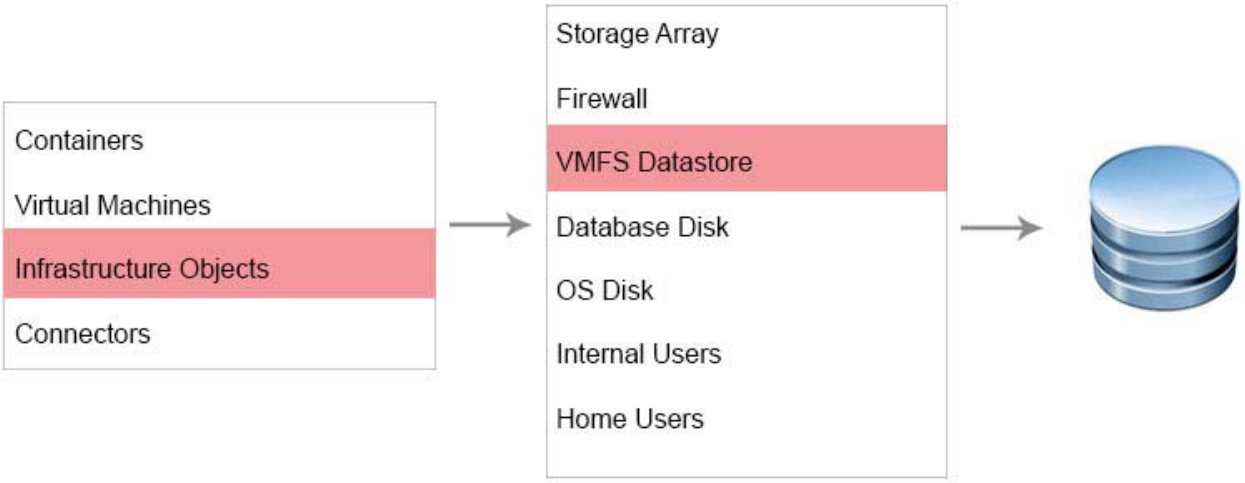
Containers
Virtual Machines
Infrastructure Objects
Connectors
Storage Array
Firewall
VMFS Datastore
Database Disk
OS Disk
Internal Users
Home Users

Containers
Virtual Machines
Infrastructure Objects
Connectors
Dependency Connector